# Tagra | RF 2.4GHz & DMX | Mains Powered 100-240V | LED Wall Plate | 4 Zones | RGB | Black

**MP4RGB-B / ITM002411**




Datasheet

23-10-2026

# Tagra | RF 2.4GHz & DMX | Mains Powered 100-240V | LED Wall Plate | 4 Zones | RGB | Black




| Control Out | IP Rating | Voltage In | Warranty | Zones |
|---|---|---|---|---|
| DMX | IP20 | 100-240V | 5 Years | 4 Zones |

**SKU:** MP4RGB-B
**ITM:** ITM002411

**Key Features:**

- **Colour Control Type:** RGB
- **Control Distance:** 10m
- **Body Colour:** Black
- **Dimensions (W x H x L):** 120 x 50 x 120mm

| Mechanical Data | | | |
|---|---|---|---|
| **Body Colour:** | Black | **Product Weight:** | 234g |
| **Dimensions (LxWxH):** | 120 x 120 x 50mm | | |

| Input Data | | | |
|---|---|---|---|
| **Input Current Type:** | AC | **Input Voltage:** | 100V - 240V |

| Control Data | | | |
|---|---|---|---|
| **Colour Control Type:** | RGB | **Control Distance (barrier-free):** | 10m |
| **Control Signal Input:** | RF 2.4GHz | **Control Signal Output:** | DMX |
| **No. of Scenes:** | 4 | **No. of Zones:** | 4 |

| Environmental Data | | | |
|---|---|---|---|
| **Application Environment:** | Indoor | **Body Material:** | PC |

| Environmental Data | | | |
|---|---|---|---|
| **Ingress Protection (IP):** | IP20 | **Mounting Type:** | WALL |
| **Operating Temperature:** | -30°C - 55°C | | |

## Dimension Drawing

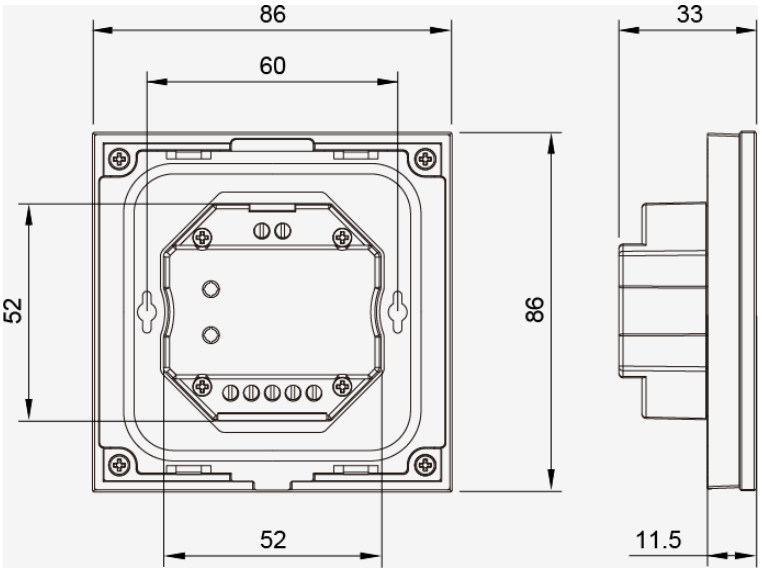


| Packaging Data | | | |
|---|---|---|---|
| **Packaging Height:** | 50mm | **Packaging Length:** | 113mm |
| **Packaging Width:** | 110mm | **Packaging Weight:** | 238g |

**Disclaimer**

Tagra Lighting have taken reasonable care to ensure that the information in this datasheet is accurate at time of publication however it should be noted that all specifications are subject to tolerance. Descriptive specifications such as colour are subjective. Tagra Lighting reserve the right to update specifications without notice. The information in the datasheet may only be relied on by customers of Tagra Lighting in accordance with applicable terms and conditions.

Tagra Lighting is a trading name of T.R Ventures Limited, a company incorporated in England with registered number 07757720. Our registered office is Unit 2, Southfield Industrial Estate, Trafford Park, M17 1SJ.

www.tagra-lighting.co.uk

support@tagra-lighting.co.uk